REV	ECR#	DESCRIPTION	DRAWN/DATE	CHECKED/DATE	APPROVED/DATE
A0	~	NEW DESIGN	Jason_thb 2014/11/25		JY.W 2014/11/25
A1	~	ADD NEW SPECIFICATIONS	Jason_thb 2017/01/12		

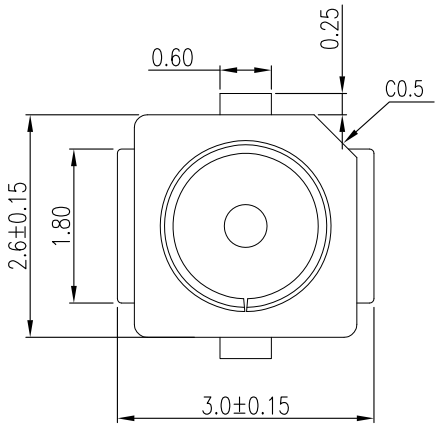

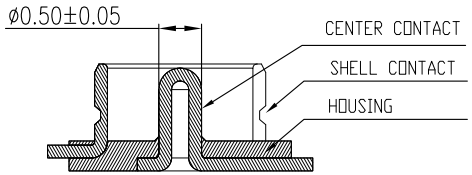

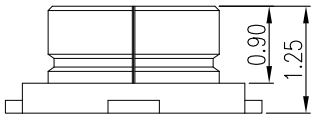

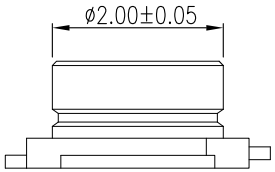

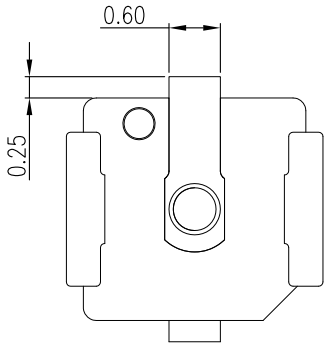

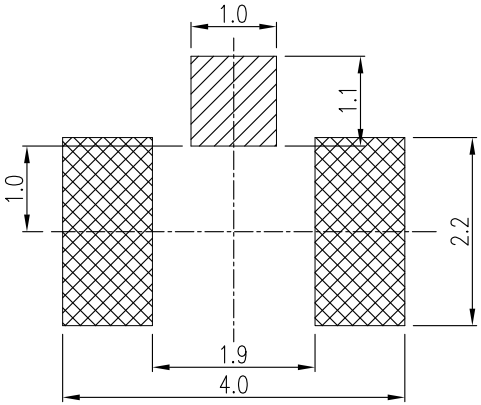

RECOMMENDED PCB LAYOUT

(TOLERANCE:±0.05)

CENTER CONTACT

GROUND CONTACT

NOTES :

1.0. RATING :
- 1.1. VOITAGE :60 VAC (R.M.S.)
- 1.2. NOMINAL CHARACTERISTIC IMPEDANCE: 50 Ohm
- 1.3. APPLICABLE FREQUENCY: DC ~ 6GHz
- 1.4. VSWR: 1.3 MAX. (DC~3GHz), 1.5 MAX. (3~6GHz)
- 1.5. TEMPERATURE :-40°C TO +85°C
- 1.6. APPLIED TO IR SOLDERING PROCESS

2.0. MATERIAL SEE BILL OF MATERIAL :
- 2.1.HOUSING: THERMOPLASTIC,UL94V-0,
- 2.2.CENTER CONTACT : COPPER ALLOY.
- 2.3.SHELL CONTACT: COPPER ALLOY.

3.0.PRODUCT NUMBERING CODE :

MRFB01 - B 0 1 1 0 0

① ② ③ ④ ⑤ ⑥ ⑦

① SERIES :
MRFB01 :MICRO RF I BAORD SMT CONNECTOR

② COLOR OF HOUSING :
B :HOUSING BLACK
N :HOUSING NATURAL

③ MATERIAL OF HOUSING
0 :LCP

④ CONTACT OF PLATING :
1 :CENTER CONTACT 1u" ON CONTACT AREA,GOLD FLASH OTHER AREA;50u' MIN. NICKEL UNDERPLATING
2 :CENTER CONTACT 1.5u" ON CONTACT AREA,GOLD FLASH OTHER AREA;50u' MIN. NICKEL UNDERPLATING

⑤ GROUNDED OF PLATING :
1 :SHELL CONTACT 1u" ON CONTACT AREA,GOLD FLASH OTHER AREA;50u' MIN. NICKEL UNDERPLATING
2 :SHELL CONTACT 1.5u" ON CONTACT AREA,GOLD FLASH OTHER AREA;50u' MIN. NICKEL UNDERPLATING

⑥ PADS TYPE :
0 :3 PADS TYPE
1 :4 PADS TYPE

⑦ PACKING :
0 :1 REEL 5000PCS

PRODUCT SPEC:

PACKAGE SPEC:

CONTROL POINT
FAI : to
CRITICAL (Cpk & Cp) :
[X] = Places
MAJOR (QC CHECKED) :
▼ = Places
TOOL DESIGN DIMENSION :
T DIM = Places
EVALUATE REPORTES NUMBER
NUMBER:

TOLERANCES UNLESS OTHERWISE SPECIFIED
GENERAL . ±0.30 X ±0.25 .XX ±0.15 .XXX ±0.05
ANGLES . ±3.0° .X° ±2.0° .XX° ±1.0°

SCALE 1:1
SHEET 1/1
UNIT mm

DRAWING	Jason_thb	DATE 2014/11/25
DESIGN	Jason_thb	DATE 2014/11/25
CHECK		DATE
APPROVED	JY.W	DATE 2014/11/25
3D FILE		

深圳市山谷道电子有限公司

TITLE
MICRO RF I BAORD
SMT 3 PADS TYPE

SERIES MICRO RF SERIES
SIZE A3
DRAWING NO MICRO-RFB01-C00-00
REV A0